
# Education Quarterly Reviews

**Waspada, D., Beddu, S., & Martosenjoyo, T. (2022). Universal Design Study of Circulation Systems at the Faculty of Engineering, Hasanuddin University Gowa. *Education Quarterly Reviews*, 5(4), 260-278.**

ISSN 2621-5799

DOI: 10.31014/aior.1993.05.04.589

The online version of this article can be found at:
**https://www.asianinstituteofresearch.org/**

Published by:
The Asian Institute of Research



The Asian Institute of Research *Education Quarterly Reviews* is a peer-reviewed International Journal. The journal covers scholarly articles in the fields of education, linguistics, literature, educational theory, research, and methodologies, curriculum, elementary and secondary education, higher education, foreign language education, teaching and learning, teacher education, education of special groups, and other fields of study related to education. As the journal is Open Access, it ensures high visibility and the increase of citations for all research articles published. The *Education Quarterly Reviews* aims to facilitate scholarly work on recent theoretical and practical aspects of education.

ASIAN INSTITUTE OF RESEARCH
Connecting Scholars Worldwide

The Asian Institute of Research
Education Quarterly Reviews
Vol.5, No.4, 2022: 260-278
ISSN 2621-5799

DOI: 10.31014/aior.1993.05.04.589

# Universal Design Study of Circulation Systems at the Faculty of Engineering, Hasanuddin University Gowa

Dzulkarnaim Waspada[1], Syarif Beddu[2], Triyatni Martosenjoyo[3]

[1,2,3] Department of Architecture, Faculty of Engineering, Hasanuddin University

Correspondence: Dzulkarnaim Waspada, Department of Architecture, Faculty of Engineering, Hasanuddin University, Gowa, South Sulawesi, Indonesia. E-mail: dzulkarnaim.w@gmail.com

**Abstract**
The Campus of the Faculty of Engineering, Hasanuddin University Gowa (FT Unhas Gowa) is one of the buildings built where issues and problems regarding human rights equality have been discussed. However, the circulation system in the FT Unhas Gowa area has implemented a universal design concept with guide lanes, and the provision of ramps seems to only partially meet users' needs in terms of facilities' affordability. This research will be conducted using evaluative research with qualitative analysis. Evaluative research is a research activity that evaluates an activity/program that aims to measure the success of an activity/program and determine whether the success of a program has been as expected. This study aims to evaluate the infrastructure of educational facilities in tertiary institutions. Activities in the data analysis of the Spradley model consist of domain analysis, taxonomic analysis, componential analysis, and analysis of cultural themes. In addition, validity testing is done by using the triangulation technique. The results of studies describe the horizontal circulation system (open hallways, doors, corridors, tactile pavings) and vertical circulation (ramps, stairs, elevators) in the FT Unhas Gowa. The research shows that these facilities still need to meet the standards fully, therefore recommending the design of providing facilities that implement Universal Design to meet the convenience of all visitors and building users in the FT Unhas Gowa area.

**Keywords:** Universal Design, Circulation System, Hasanuddin University

## 1. Introduction

Awareness of human rights at this time is fundamental in people's lives, where everyone has equal rights regardless of differences in religion, ethnicity, race, ethnicity, group, class, social status, economic status, gender, and gender. so on (Risdianto, 2017; Syaifuddin, 2006). The fulfillment of human rights cannot be separated from using facilities without being limited by physical ability, age, and gender. Equality in the use of facilities as stated in the Regulation of the Minister of Public Works Number 30/PRT/M/2006 (Permen PU No. 30/PRT/M/2006) concerning Technical Guidelines for Facilities and Accessibility in Buildings and the Environment.

Philosophically, the state's responsibility for respecting and recognizing human rights is contained in Article 28I paragraph (4) of the 1945 Constitution of the Republic of Indonesia, which states that the protection, promotion, enforcement, and fulfillment of human rights are the responsibility of the state, especially the government (Ardinata, 2020; Trimaya, 2016). The issue of equality of human rights is also discussed in Universal Design, where universal design is a concept that emerged as an answer to problems in using a product or facility. Universal design aims that a product in the built environment can be used by everyone regardless of age, gender, limited ability, and differences in body size (Levarinda, 2021).

In Indonesia, universal design is stated in the Regulation of the Minister of Public Works and Public Housing Number 14/PRT/M/2017 (Permen PUPR No. 14/PRT/M/2017) Concerning the Ease of Building Requirements that a building must be free from obstacles (barrier-free), where the condition of the building and the environment is built without physical, information, or communication barriers so that everyone can reach and utilize the building and its environment safely, comfortably, efficiently, and independently. This refers to a universal design that aims so that a building and its facilities can be used by everyone together without requiring adaptation or special treatment (Soleh, 2016; Wibawa & Widiastuti, 2020).

The campus of the Faculty of Engineering, Hasanuddin University Gowa (FT Unhas Gowa) is one of the buildings that was built where issues and problems regarding human rights equality have been discussed. In the Master Plan of the Faculty of Engineering, Hasanuddin University Gowa; it is stated that the context of planning the FT Unhas Gowa Campus building based on Law Number 4 concerning Persons with Disabilities (1997). Furthermore, government Regulation of the Republic of Indonesia Number 43 of 1998 concerning Efforts to Improve Social Welfare of Persons with Disabilities, and Decrees Minister of Public Works concerning Technical Requirements for Accessibility in Public Buildings and the Environment (1998), is planned to apply the concept of "Universal Design"/ "Barrier-Free Design" to maximize and facilitate accessibility for all prospective students and visitors including persons with disabilities and the elderly in accessing buildings.

The circulation system in the FT Unhas Gowa area has implemented a universal design concept with tactile pavings , and the provision of ramps seems to only partially meet users' needs in terms of the affordability of facilities. The phenomenon is that there are differences in floor height at several points of the circulation path that can endanger users, especially elderly and wheelchair users (Kurniawan, 2014). Buildings in the FT Unhas Gowa area, such as the CSA building and the Department building, have provided ramps, but they are still insufficient to meet the needs of wheelchair users because they are not equipped with handrails. This condition indicates that the circulation system on the FT Unhas Gowa has not fully accommodated the users of the circulation system. Hence, so it needs to be analyzed further based on universal design principles and PUPR Ministerial Decree No. 14/PRT/M/2017 concerning Requirements for Building Ease of Building.

The universal design concept's benefit is creating inclusive design solutions and improving accessibility and usability, enabling people of all levels of ability to live independently (Limantoro, 2014). However, the universal design only partially accommodates the limited capabilities. Some things are unique, so the universal design concept only sometimes meets the needs of users with certain conditions, such as people with physical uniqueness or people with abnormalities in body size. That someone cannot move or use facilities independently. These factors should be considered, so they must be considered in a universal design system to meet legal equality in using facilities in a built environment. The research questions are:

1) Has the circulation system planning for the FT Unhas Gowa implemented a standardized universal design concept?
2) Has the universal design at the FT Unhas Gowa catered to the special needs of certain users?
3) What are the design recommendations for developing a circulation system design that applies a universal design concept that accommodates not only standardized systems but also the uniqueness of certain users at FT Unhas Gowa?

## 2. Method

This research will be conducted using evaluative research with qualitative analysis. Evaluative research is a research activity that evaluates an activity/program that aims to measure the success of an activity/program and determine whether the success of a program is as expected (Hamdi & Bahruddin, 2015; Kadarudin & MH, 2021). So, this study tries to evaluate the results design of the infrastructure of educational facilities in FT Unhas Gowa by understanding the activities and subjective views of the actors at the research location. This study used methods of collecting data from the literature, field observations on the research object, interviews, photos, measurements, and other documents.

Researchers in qualitative research are research instruments (human instruments) because researchers can adapt to respondents or informants and their activities (Rukajat, 2018). The direct involvement of researchers as research instruments aims to make respondents or informants as data sources more open to providing helpful information in the research process. The research location chosen is the Campus of the Faculty of Engineering, Hasanuddin University Gowa (FT Unhas Gowa Campus), which is located on Jalan Poros Malino Km. 6, Bontomarannu, Gowa Regency, South Sulawesi Province.


Figure 1: Satellite image of research site

This study uses data analysis techniques Spradley model. Spradley's data analysis was carried out interactively and took place continuously until it was completed so that the data was saturated (Sugiyono, 2020). Activities in the data analysis of the Spradley model consist of domain analysis, taxonomic analysis, componential analysis, and analysis of cultural themes. In addition, validity testing is done by using the triangulation technique.

## 3. Results

This research aims to determine circulation system in FT Unhas Gowa can aid the users activities safely, easily, and independently. The measurement result and participant activities in tte FT Unhas Gowa circulation then compared with universal design guide from Permen PUPR No. 14/PRT/M/2017 and Centre for Excellence in Universal Design (CEUD) as comparison to find similarities and diffference between guides and existing conditions.


Figure 2**:** Vertical and horizontal circulation maps

### *3.1 Comparison of Standards and Measurement Results of Vertical Circulation*

Report any other analyses performed, including subgroup analyses and adjusted analyses, indicating those that were pre-specified and those that were exploratory (though not necessarily in the level of detail of primary analyses). Consider putting the detailed results of these analyses on the supplemental online archive. Discuss the implications, if any, of the ancillary analyses for statistical error rates.

a. Stairs

Existing Condition:

1) The entrance steps have 8.2 cm - 21.5 cm height and 119.8 cm – 235 cm depth.
2) Internal stair steps have 16 cm - 18 cm height and 30 cm depth.
3) Internal stair handrails positioned 105.5 cm - 133 cm above floor level.
4) Internal star handrails using oval shape with 10.5 cm - 11.8 cm wide and 6.5 cm - 7.5 cm height.

Permen PUPR No. 14/PRT/M/2017:

1) Steps height in the range 15 cm – 18 cm dan at least 30 cm depth.
2) Handrails should be continuous throughout the flight and positioned 65 cm - 80 cm above floor level, at least on one side of the wall.
3) Handrails have a cross-sectional diameter of at least 5 cm.

Centre for Excellence in Universal Design:

1) Riser height between 15 cm – 18 cm and the tread height at least 30 cm.
2) Handrails should be positioned with the upper surface 90 cm – 100 cm above the pitch line of the stair flight. The provision of a second handrail with the upper surface positioned 60 cm - 75 cm
3) Handrails should be easy to grip with a diameter of 4 m - 5 cm, and a diameter of 25 cm – 32 cm for the second handrail.

The results of the comparison between the stair condition and the universal design guidelines show that some parts of the stairs follow the universal design guidelines but do not fully meet the user's needs. There are different conditions between the existing conditions and the universal design guidelines

From site conditions, it is known that users are more comfortable using stairs with a height of 15 cm - 16 cm. Stairs with a height of 17-18 cm are less comfortable to use because they give a tiring effect to crutches users and the elderly. Non-uniform footing heights can cause blind users to trip. There are stairs with a height of 21.5 cm which are less comfortable for users to walk (Fig.3)

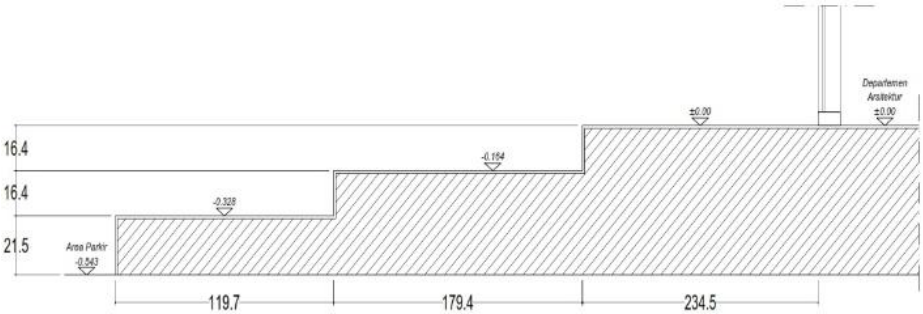


Figure 3: Entrance stair

Handrail with 105.5 cm - 113 cm height above the floor can still be reached by the user. There are conditions where there are handrails at a distance of 130 from the floor that is difficult for users with small stature to reach (Fig. 4a). The size of the handrail on the internal stairs has a size that is larger than the standard which is less comfortable for the user to hold (Fig. 4b).

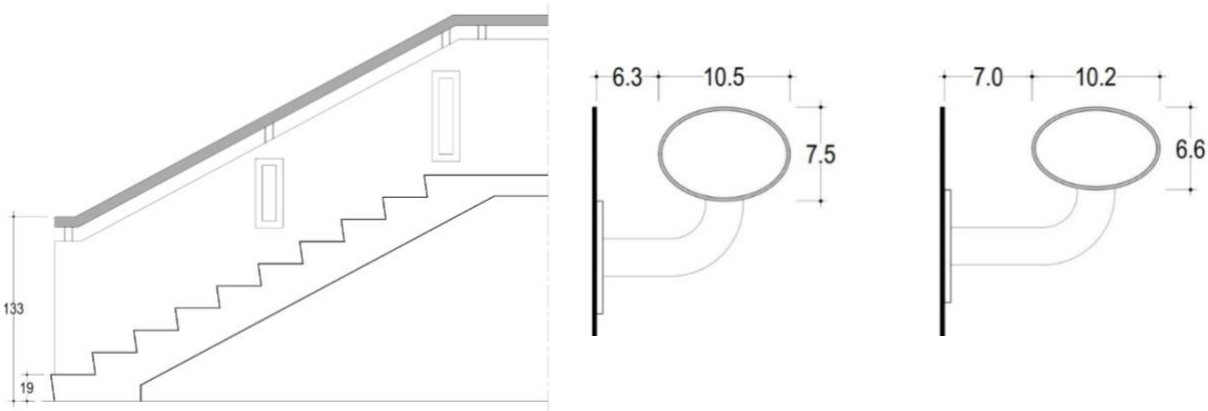


(a) (b)

Figure 4: (a) Internal stair; (b) handrail profile.

b. Ramps

Existing Condition:

1) The ramp on site has a gradient of 3° - 7°
2) The ramp in the FT Unhas Gowa Campus has a minimum width of 130 cm.
3) There are no canteen/curb and handrails on every ramp on the FT Unhas Gowa Campus.

Permen PUPR No. 14/PRT/M/2017:

1) External ramps have a maximum gradient of 5° or a ratio of 1:12.
2) Effective width should not be less than 95 cm without a low curb and 120 cm with a low curb. Low curb available with a maximum height of 10 cm.
3) Equipped with two layers of continuous handrails on both sides with a height of 65 cm and 80 cm.

Centre for Excellence in Universal Design:

1) The gradient of the ramp should not exceed 1:20.
2) The clean width of the ramp should not be less than 150 cm.
3) Incorporate curbs with a height of 10 cm.
4) Equipped with two layers of continuous handrails on both sides with a height of 90 cm - 100 cm and 60 - 75 cm from the surface of the ramp and landing with a diameter of 4 cm - 5 cm.

From the comparison of the ramp and universal design guidelines, it is known that ramp users are more comfortable using ramps with a 3° gradient. A ramp with a 5° gradient or equivalent to the maximum slope of PUPR makes it difficult for ramp users to move a wheelchair. Ramps that are not equipped with curbs and handrails can potentially hazard to the users (Fig. 5).

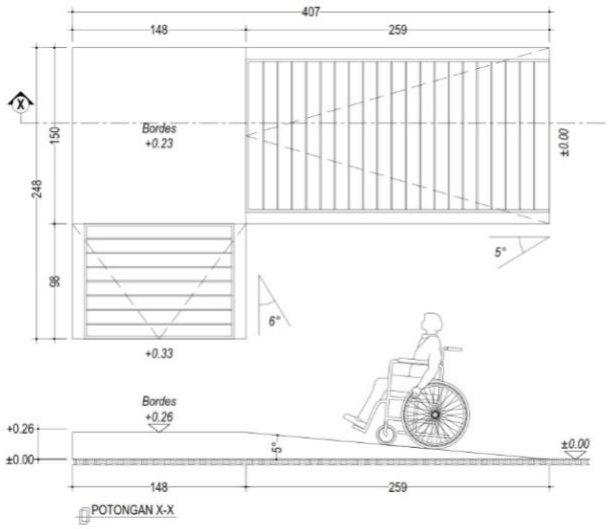


Figure 5: Ramp with 5° gradient.

There is a condition where there is a 20 cm difference in label height from the floor surface that unable the wheelchair users to use the ramp (Fig. 7). Another condition where the 2 cm level difference at the end of the ramp causes the wheelchair to get stuck while crossing (Fig. 8).

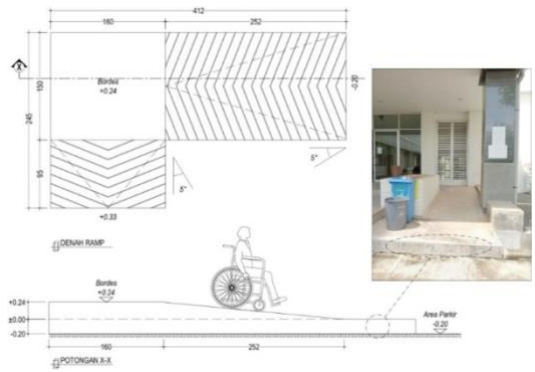

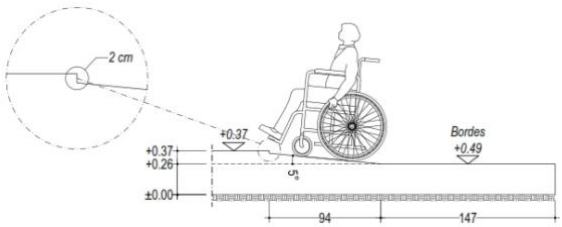


Figure 7: Ramp at Architecture Department back entrance.

Figure 6: Ramp at Civil Department entrance.

c. Elevator

Existing Condition:

1) The elevator has a door opening width of 90 cm - 120 cm.
2) The button panel in the elevator lobby is positioned 107 cm - 113 cm from the floor level.
3) The button in the elevator is positioned 98 cm - 133 cm from the floor level.
4) The elevator door is fully open for 5 - 6 seconds before closing automatically.
5) Elevator buttons are not provided with braille.
6) The handrail on the elevator wall is positioned 85 cm – 90 cm from the floor.

Permen PUPR No. 14/PRT/M/2017:

1) The width of the elevator door opening is at least 110 cm.
2) The outer panel is installed in the lobby with a maximum height of 90 cm from the elevator floor.

3) The inner elevator panel is installed with a maximum height of 90 cm from the face of the elevator floor.
4) Ensure elevator doors are fully open for at least 8 seconds.
5) Equip all buttons on the panel braille.
6) Provide handrails on three sides of the elevator with a distance of 80 cm - 85 cm from the elevator floor.

Centre for Excellence in Universal Design:

1) Elevator doors must have a clear opening width of 95 cm.
2) The elevator panel should be positioned 90 cm - 110 cm from the elevator floor to the center line of the button.
3) The elevator doors must remain fully open for at least 8 seconds.
4) The numbers and symbols on the buttons are embossed and equipped with braille.
5) Handrails are available on each elevator wall at 90 cm from the elevator floor.

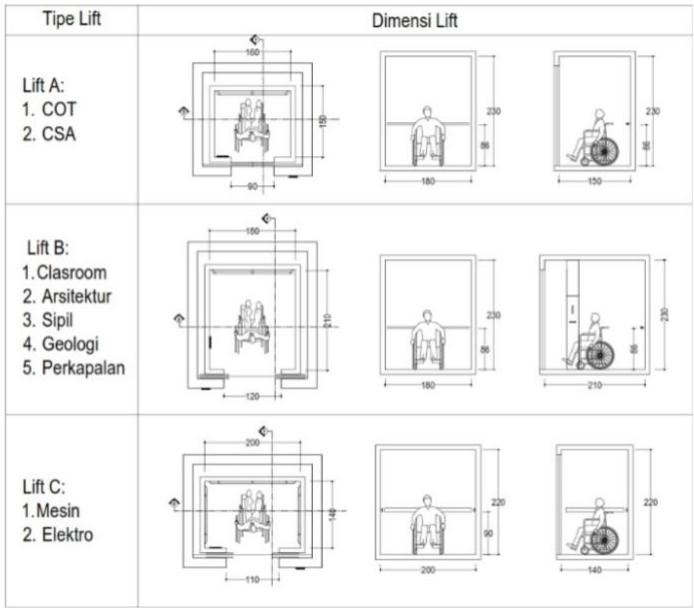


Figure 8: Types of elevator at FT Unhas Gowa

The elevator on the FT Unhas Gowa consists of three types. As shown in figure 8, the size of the Type B elevator is quite comfortable for wheelchair users, while the Type A and C elevators are smaller and narrower for wheelchair users than other users. The Type A elevator doors are smaller than standard but still adequate for wheelchair users.

The duration of the elevator door opening for 5-6 seconds makes it difficult for wheelchair users, crutches users, and visually impaired persons to enter the elevator. The position of the lobby panel of 107 cm – 113 cm from the floor causes wheelchair users to have difficulty pressing the button. Some buttons have heights that are difficult for wheelchair users to reach. The handrail in the elevator has a fairly standard distance. In Type A and B elevators, the handrail is only available on the rear wall giving more distance to reach the handrail. In Type C elevators, handrails are available on three sides of the elevator but have a shape that is less comfortable to hold (Fig. 9)

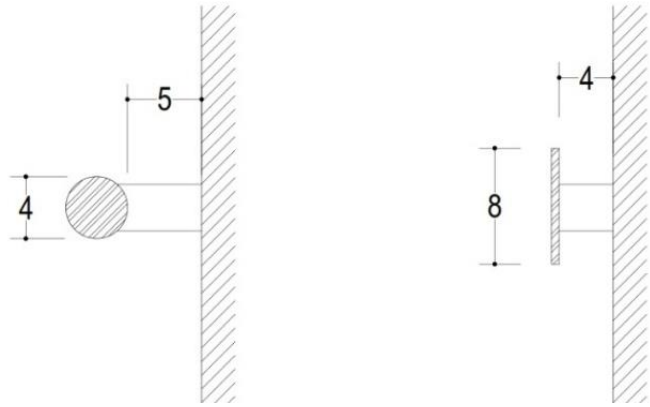


(a) (b)

Figure 9: Handrail on elevator Type A and B; (b) Handrail on elevator Type C

The elevator buttons are not equipped with braille, which makes it difficult for visually impaired users to use the elevator. Buttons with embossed characters are not enough to provide convenience for blind people who do not recognize the alphabet and numbers.

### *3.2 Comparison of Standards and Measurement Results of Horizontal Circulation*

a. Doors

Existing Condition:

1) Building entrance doors are double glass doors with a width of 170 cm, 250 cm, and 200 cm.
2) The internal double-door building has a size of 160 cm.
3) The student toilet door has a size of 70.5 cm and the lecturer's toilet door has a size of 76.5 cm.
4) The internal door handle uses a lever type with a height of 100 cm from the floor level.

Permen PUPR No. 14/PRT/M/2017:

1) The effective width of the entrance door opening is at least 90 cm, and other doors have effective opening width of at least 80 cm.
2) The clean width of the toilet door is at least 70 cm and 90 cm for disabled toilets.
3) The door handle uses a push/pull or lever type that can be operated with one closed fist, installed at most 110 cm from floor level.

Centre for Excellence in Universal Design:

1) The clean width of the entrance door is 85 cm - 100 cm. The internal door has an opening width of 85 cm.
2) Doors for toilet and bathroom facilities used by disabled users must have a clean opening of at least 95 cm.
3) Using lever or push/pull type door handles, installed 80 cm - 100 cm from the floor surface.

From the comparison of the existing condition of the door and the universal design guidelines, it is shown that the COT and CSA building entrance with a 170 cm width has a door opening design that causes the width of the opening to decrease causing wheelchairs to be unable to pass through the door if it is only open on one side (Fig. 10a). Department Building doors with 250 cm and 200 cm widths have wide openings that wheelchairs can easily pass through (Fig. 10 b). Entrance doors that are heavy when opened cause certain users to have difficulty opening the door.

The toilet doors have a size that does not match the guidelines, causing wheelchair users to be unable to pass through the toilet door (Fig 11). The lecturer's toilet door has a wider size and can only be passed by a small wheelchair (Fig. 11 b).

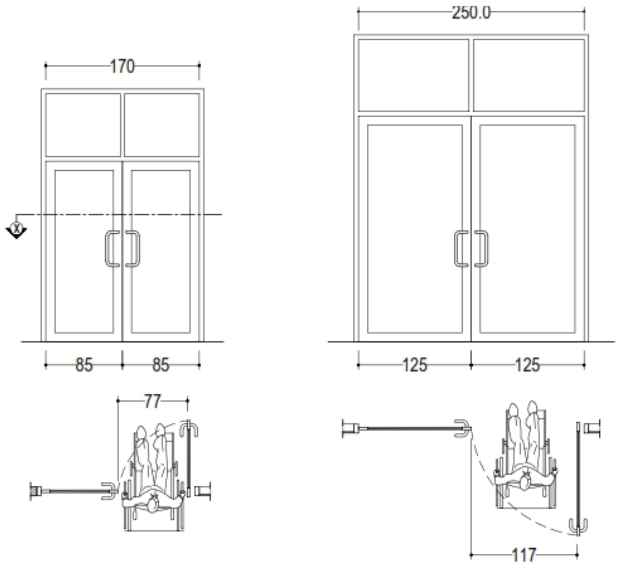


(a) (b)

Figure 11: (a) COT Building and (b) Department Building entrance doors.

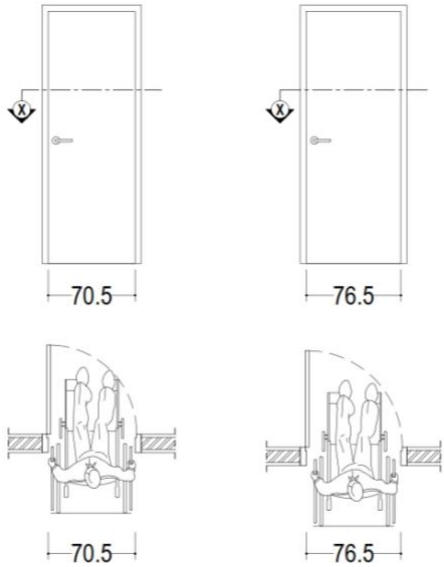


(a) (b)

Figure 10: (a) Student toilet and (b) lecturer toilet doors

b. Open Hallway

Existing Condition:

1) Open hallways are 217 cm to 480 cm wide.
2) The surface has a rough and non-slip surface. There is a mossy surface and puddles when it rains.
3) Signboards are available in front of each department building.
4) There are no curbs or handrails at the edge of the hallway.
5) The rest area in front of the Department building is not protected from the weather and is located far apart

Permen PUPR No. 14/PRT/M/2017:

1) Have a minimum effective width of 140 cm.
2) Slippery floor surfaces are not allowed.
3) Equipped with informative and easily visible directions.
4) Buildings used by persons with disabilities and the elderly must be equipped with a handrail at least on one side of the hallway.
5) Can be equipped with seats every 900 cm distance.

Centre for Excellence in Universal Design:

1) The access route with 200 cm wide to enable two people or wheelchair users to pass each other
2) Surfaces must be firm, solid, and slip-resistant and not cause glare.
3) There are signs installed without blocking the circulation path.
4) Provide a guardrail with a height of 120 cm that visually contrasts with the surrounding surface.
5) Provide a bench or resting places at intervals on long routes.

The results of the comparison between the existing condition and the universal design guidelines show that the open hallway has a wide access route that allows wheelchair users to pass comfortably together with other users (Fig 12). The concrete surface in the open hallway is quite comfortable for participants to pass by. The zigzag shape and circular path in the open hallway increase mileage and can cause fatigue to the users, especially for crutches, wheelchair users, and the elderly.

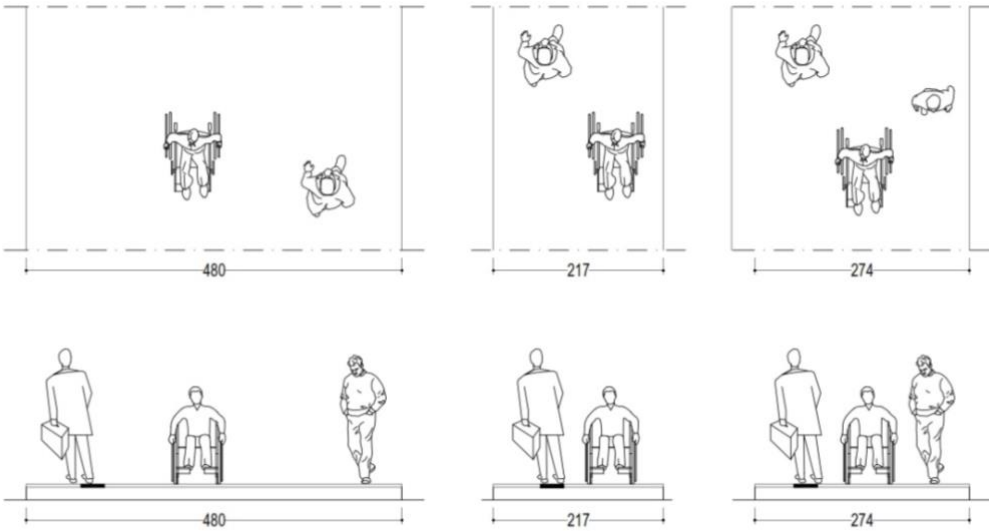


Figure 12: The existing width of the open hallway

The resting area located in front of each department building has a large distance between each resting area and is not protected from weather conditions causing people to use the flowerpots along the hallway to rest. Signboards with directional information are only available in front of each department building causing users to lose their way at the intersection of open hallways.

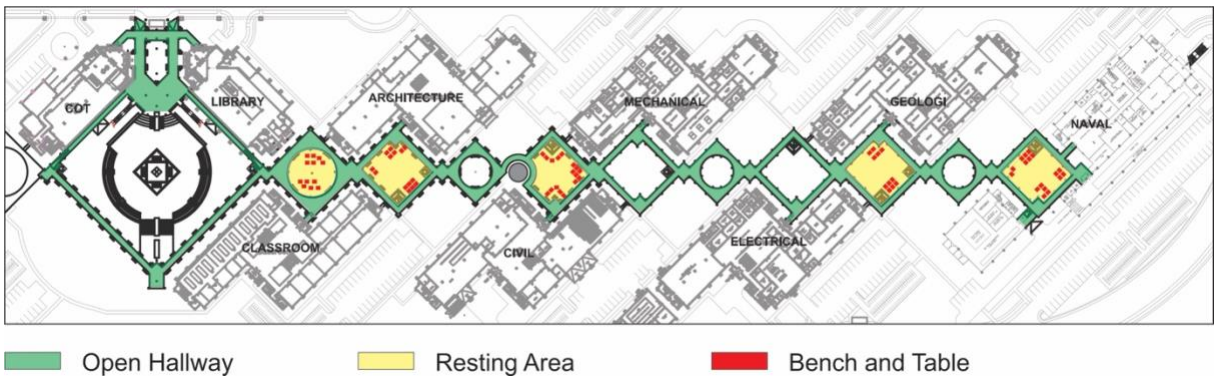


Figure 13: Resting area along the open hallway

c. Corridor

Existing Condition:

1) The internal corridor has a 180 to 233 cm width.
2) Floor maps are available in some building units. There are no signs or directions in the corridors.
3) There are unprotected columns embossed on the walls.

Permen PUPR No. 14/PRT/M/2017:

1) The effective width of the corridor is at least 152 cm, or at least 204 cm for two wheelchairs passing by.
2) Equipped with signs or directions that are informative and easily visible.
3) Free from all kinds of obstructions that interfere with the user's movement.

Centre for Excellence in Universal Design:

1) Corridors of public buildings should have a 200 cm width or a minimum of 150 cm.
2) Signs on circulation paths should be placed in an easily accessible location.
3) Projections on walls such as columns should be guarded permanently.

The comparison between the corridor condition and the universal design guidelines show that the internal corridors have a width that allows wheelchair users to pass easily. There are conditions where embossed columns in the corridor cause hazards for a visually impaired person who uses the wall as a guide (Fig. 14). The tactile paving in the building only leads the users from entrance elevators causing difficulty for visually impaired users to access certain facilities or rooms.

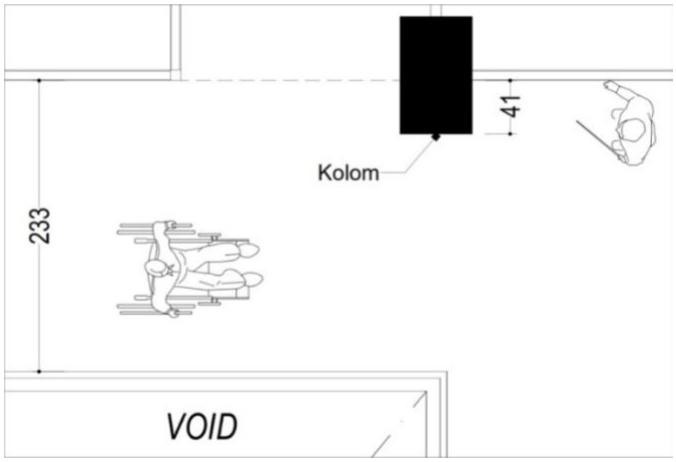


Figure 14: Embossed column in the internal corridor

d. Tactile Paving

Existing Condition:

1) Tactile paving on the site consists of guiding blocks and warning blocks.
2) Tactile pavings are installed on the edge of the open hallway and installed continuously through the entrance to the building elevator.
3) Warning blocks are installed at the intersection, the edge of the stairs, in front of the entrance, and in front of the elevator door.
4) Tactile pavings are installed along the open hallway at a distance of 45-50 cm from the edge of the hallway.
5) Some of the tactile pavings have the same color as the surrounding surface.

Permen PUPR No. 14/PRT/M/2017:

1) Tactile paving consists of guiding a line-patterned guiding block to indicate the direction of travel and a round patterned warning block to warn of changes in the surrounding situation.
2) Tactile paving must be installed, among others, at building entrances, along the edges of pedestrian paths, and towards crossing facilities with different floor heights;
3) Tactile paving must be made from solid material, not slippery, and should contrast with the surrounding surface.

Centre for Excellence in Universal Design:

1) Blister paving is used to mark the end of the pedestrian path and where the carriageway begins. Corduroy Paving is used as a warning when the users approach hazards or should be cautious.
2) Red blister paving is used at the controlled crossing point only. Buff blister paving is used at uncontrolled crossings points. Offset blister units are used to mark the edge of platforms at Train and Tram stations. Corduroy Paving is installed at the beginning and end of steps, placed 40 cm from the first step, and extended 80 cm depth.
3) The surface should visually contrast with the surrounding pavement. The red color is used only to blister paving at controlled crossing points.

The results of the comparison between the existing conditions and the universal design guidelines show that tactile pavings along the open hallway are installed 45 to 70 cm from the edge of the hallway. In Figure 15 c, the distance of the tactile pavings that follows the guidelines still poses a potential hazard for visually impaired users where

they fall while passing. The absence of protective barriers such as curbs or railings along the hallway makes it difficult for visually impaired users to identify the edge of the hallway.

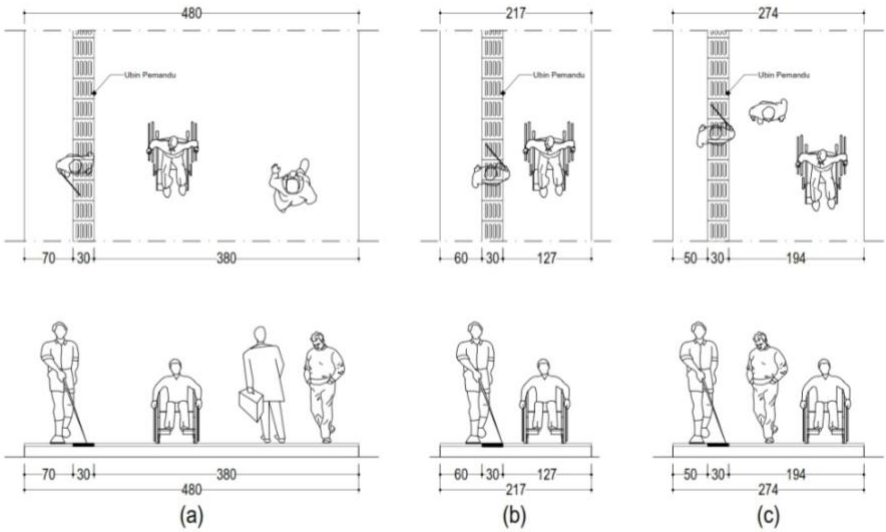


Figure 15: Different distances of the tactile pavings on the open hallway

Textured surfaces with a 30 cm distance from the tactile pavings and the additional facilities above the paving can cause disorientation and danger to visually impaired users (Fig. 16). Tactile paving installed following the shape of the open hallway with an angle of less than 90° causes users to have difficulty finding the right way, causes disorientation, and can provide potential hazards (Fig. 17).

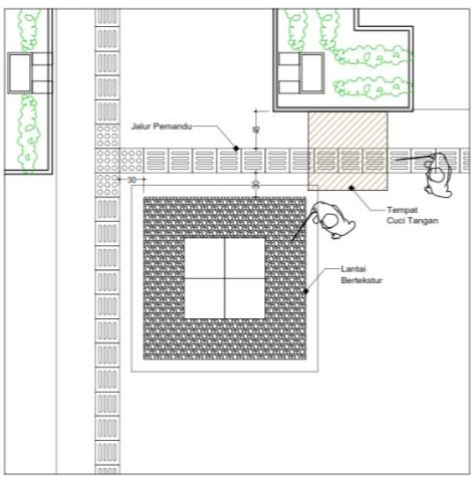


Figure 16: Textured surfaces and barriers on the tactile paving

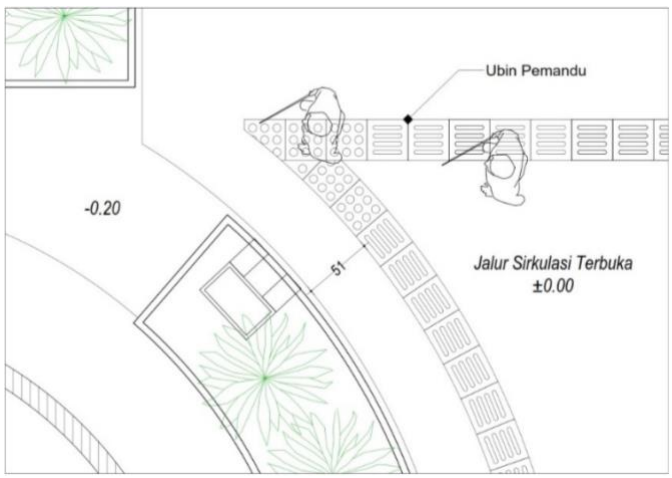


Figure 17: Tactile paving on the circular path of the open hallway

Warning blocks at building entrances installed continuously with the guiding block on stairs and doors can cause hazards because the visually impaired can be tripped or bump the doors because they can't identify it easily (Fig. 18). Tactile pavings on the ground floor of the building lead directly to the elevator door causing the visual impairment users to bump into the door or the person exiting the elevator, also causing difficulty finding the elevator button (Fig.19).

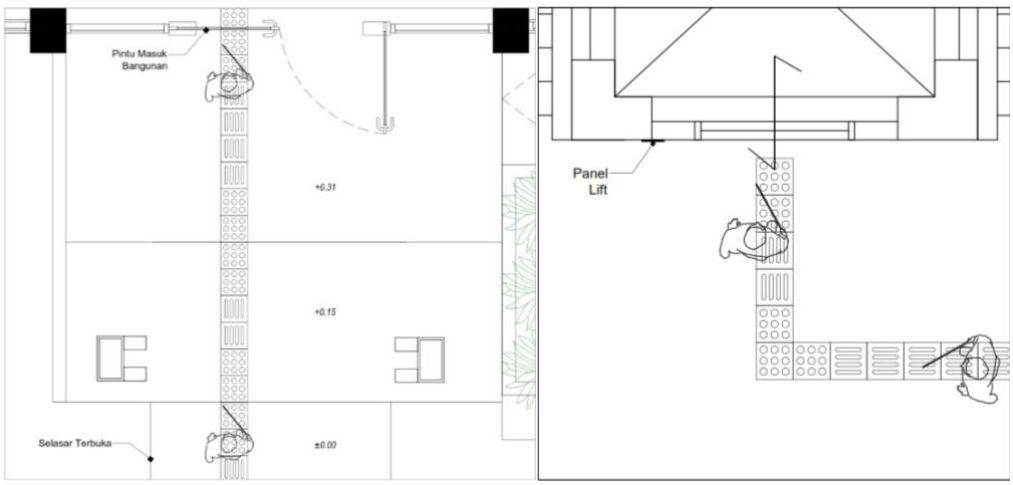


Figure 19: Tactile pavings on the stairs and building Figure 18: Tactile pavins on the building elevator entrances

## 4. Conclusion/Discussion

### *4.1 Conclusion of Universal Design Study on Circulation Systems at FT Unhas Gowa*

VER NAIM

The results of studies conducted on horizontal circulation systems (open hallways, doors, corridors, tactile paving) and vertical circulation (ramps, stairs, elevators) in the FT Unhas Gowa shows that the circulation system in the FT Unhas Gowa not fully implemented the universal design concept to facilitate the movement of visitors and building users. Some parts of the circulation system have met the standard of Permen PUPR No. 14/PRT/M/2017 and the Center for Excellence in Universal Design, yet need to be sufficient comfort, safety, and independence for building users. Based on the activities carried out by participants on the circulation system in the FT Unhas Gowa, wheelchair users and the visually impaired are a group of participants who have difficulty accessing the circulation route. There are particular conditions where one of the wheelchair participants is anxious to use the elevator (claustrophobia), causing the participant to be unable to access and carry out activities on the 1st floor of the building. Therefore, with the results of a study on the circulation system in the FT Unhas Gowa, we recommend the design providing facilities that implement the universal design to meet the comfort of all visitors and building users in the FT Unhas Gowa.

### *4.2 Design Recommendation on Circulation System of FT Unhas Gowa*

The design recommendations for the vertical circulation system at the FT Unhas Gowa Campus are as follows:

a. Stairs

1) Addition of handrails on both sides of the building entrance stairs with a maximum height of 100 cm. Can be given an additional handrail with a maximum height of 75 cm.
2) Stair steps at the entrance should be uniform, with a 15 - 16 cm of height.
3) The internal staircase uses a circular handrail with a diameter of 4 cm - 5 cm and 2.5 cm - 3.5 cm for the second handrail.
4) Using non-slip material and nosing with anti-slip material on the internal stairs.
5) Added a second handrail on the internal staircase with a maximum height of 75 cm

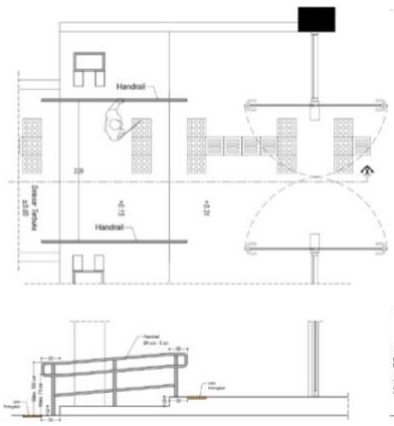


Figure 20: Entrance stair design recommendations

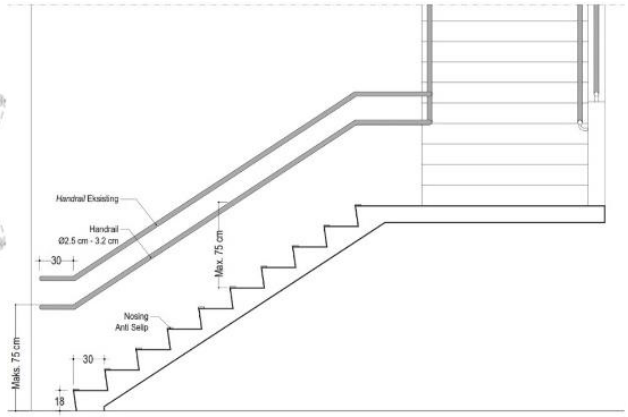


Figure 21: Internal staircase design recommendations

b. Ramps

1) Use a textured, non-slip surface on the ramp, and remove objects that can block the ramp user's access point (doors, trash cans, etc.)
2) Install continuous handrails on both sides of the ramp with a maximum height of 90 cm. Can be given a second handrail with a height of 65 cm.
3) Eliminate changes in height at the end of the ramp at the Civil Department (Fig. 7) so as not to hinder access for wheelchair users, and use a non-slip surface on the ramp, as shown in Figure 22.
4) Changing or improving the ramp design in the Architecture Department (Fig. 6) is recommended to make it accessible for wheelchair users, as shown in Figure 24.

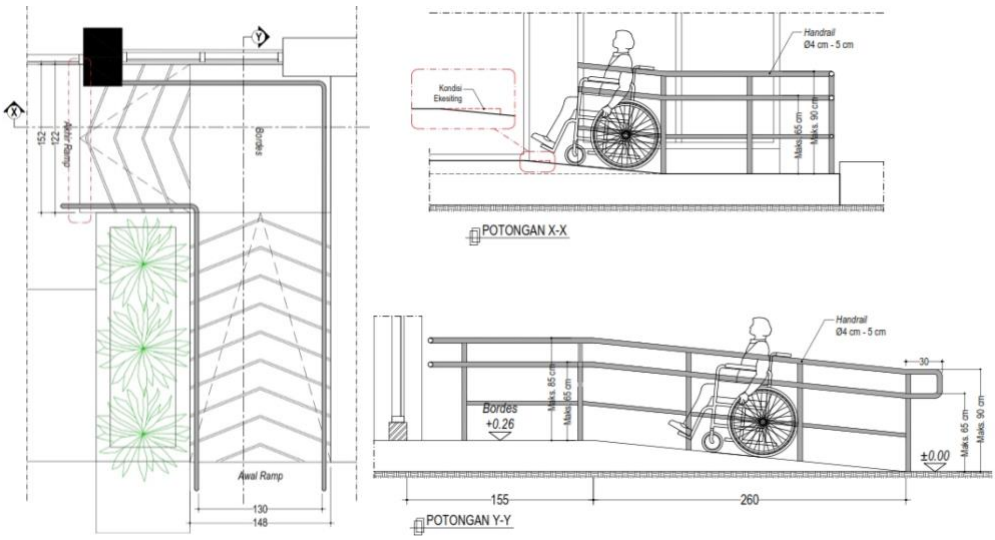


Figure 22: Civil Department ramp design recommendation.

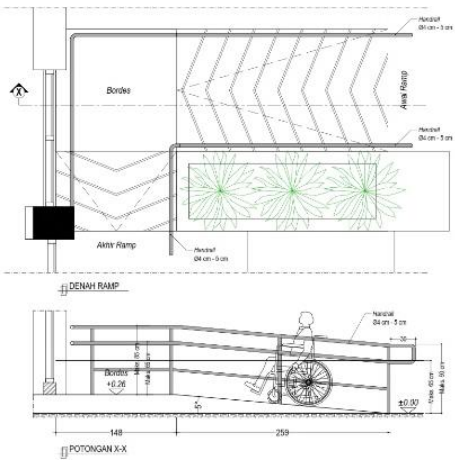


Figure 24: Department building ramp design recommendations

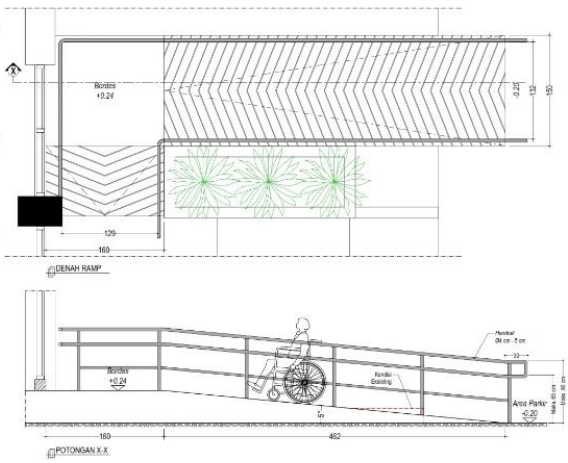


Figure 23: Architecture Department back entrance ramp design recommendation.

c. Elevators

1) External elevator panel should be installed at a height of 90 from the floor of the elevator lobby
2) Using elevator buttons with raised letters and numbers and equipped with braille.
3) Ensure the elevator remains open for at least 8 seconds.
4) Install a mirror on the back wall of the elevator at a distance of 90 cm from the elevator floor
5) Addition of a handrail with 4 cm - 5 cm diameter on the right and left walls of the elevator with a height of 80 cm from the elevator floor.
6) Equip the Architecture Department elevator (Point 4) with a sound indicator indicating the lift is arriving.
7) In Type C lifts, such as in the Electrical Department (Point 9), the number of passengers is given information if used together with wheelchair users to prevent the lift from being complete.
8) Provide information on the floor space of the building on one side of the elevator room.

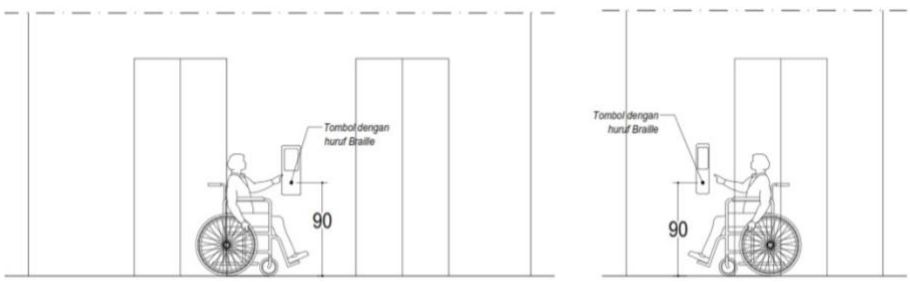


Figure 25: Recommended panel positions in elevator lobbies

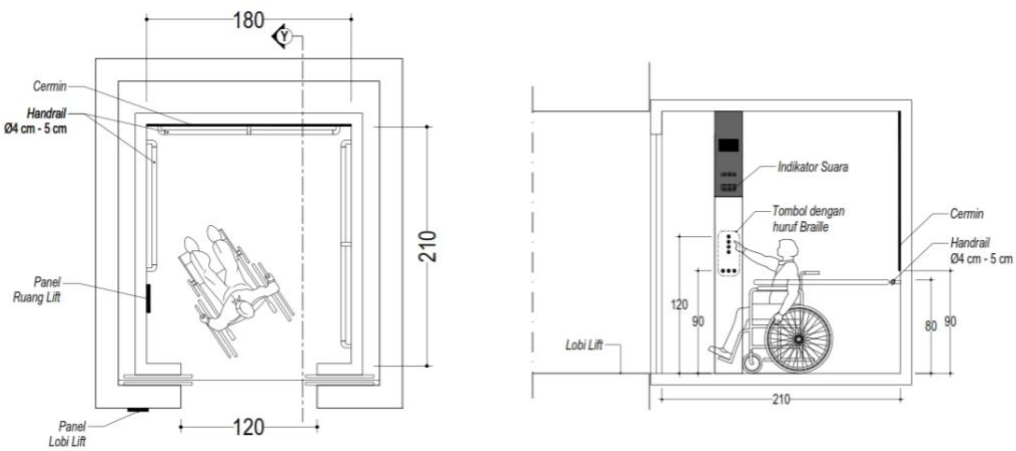


Figure 26: Elevator design recommendations

The design recommendations for the horizontal circulation system at the FT Unhas Gowa Campus are as follows:

a. Doors

1) Entrance doors should be easy to push/pull when closed. Have an effective width of at least 85 cm.
2) Incorporate colored marking strips that contrast visually on all glass doors with a height of 100 cm and 160 cm from the floor.
3) The internal door must have a clear opening of 80 - 85 cm to allow the wheelchair to pass easily.
4) The self-closing device of the door must have a pressure regulator to suit the user's physical capabilities.
5) It is recommended to change the function of the lecturer's toilet in the department building to an accessible toilet. The door of the accessible toilet has a minimum opening width of 90 cm and is given an iron plate under the door as high as 40 cm.

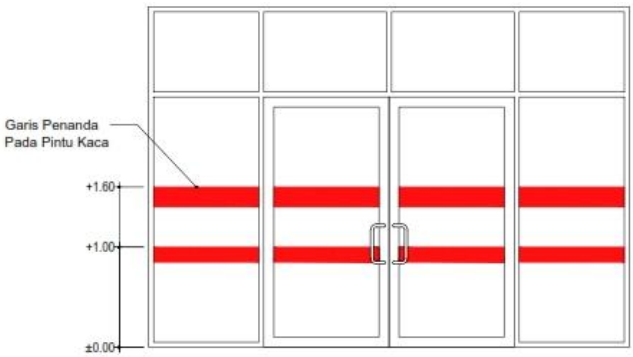


Figure 28: Recommended colored marking strip on glass doors

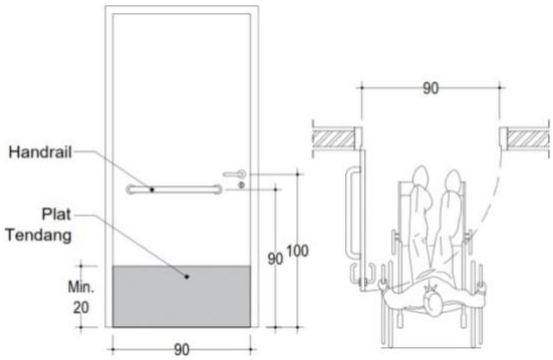


Figure 27: Recommended accessible toilet doors

b. Open Hallway

1) Provide a map of the area in the drop-off area or open lobby driveway.
2) Provide benches at the intersection of the open hallway and resting area should be rotected from the weather.
3) Provide protective barriers such as curbs or railings on the edge of the hallway adjacent to the tactile paving or on both edges of the hallway.
4) Avoid the installation of facilities (trash cans, hand washing facilities, etc.) that can become obstructions and reduce the width of the circulation path.
5) Added information in Indonesian on the signboard on the circulation path.
6) Provide the same elevation on the open hallway and resting area.

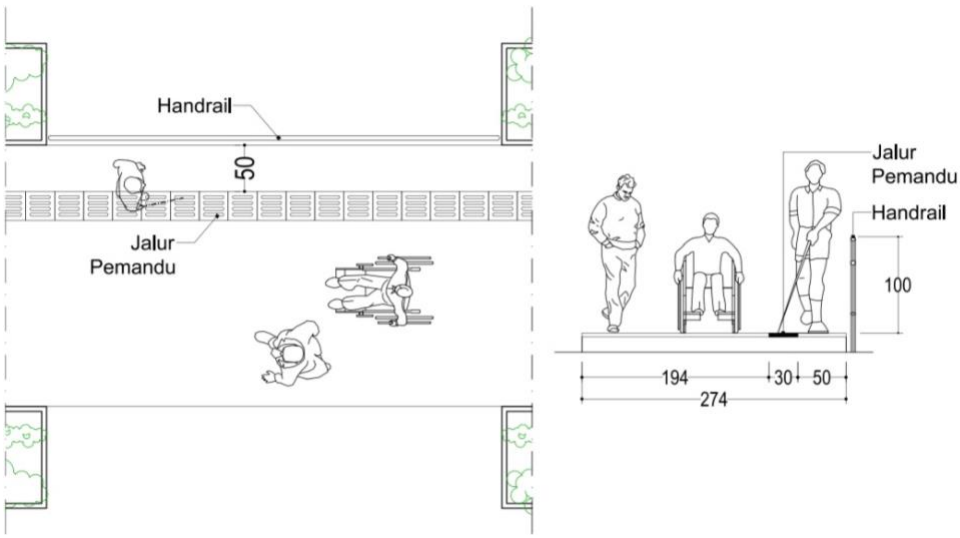


Figure 29: Protective barriers recommendation on the Open Hallway

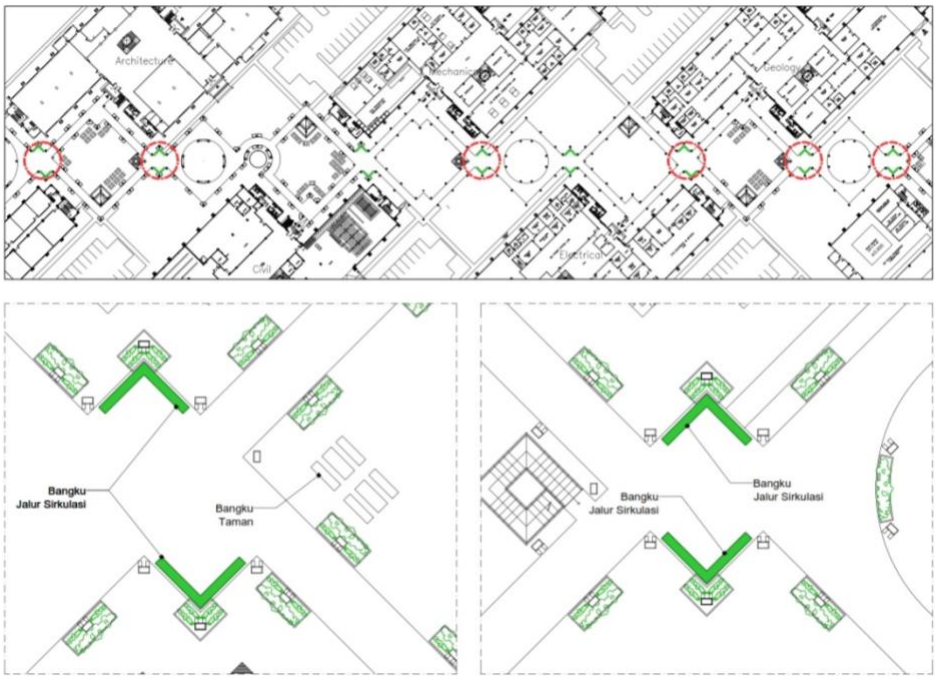


Figure 30: Resting bench at the intersection of open hallway

c. Corridors

1) Recommended to permanently protect all embossed projections on the wall such as columns.
2) Complete the nameplate of the room with Indonesian and braille letters. The position of the nameplate is recommended 140 cm from the floor.
3) The building floor map does not use reflective materials, adds information in Indonesian, and is installed 140 cm from the centerline of the map and the floor.

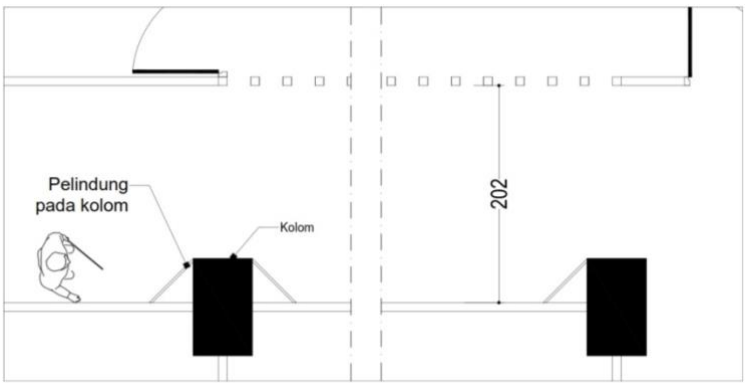


Figure 31: Recommended column protection in corridors

d. Tactile Pavings

1) Warning blocks are installed 30 cm in front of the building entrance, at the beginning and end of the stairs, and hazard area.
2) Tactile pavings at the elevator are directed to the panel in the lobby to ensure visually impaired users can find the button easily and avoid collisions with other users (NRCD, 2003).
3) Avoid installing warning blocks in front of elevator doors to avoid obstacles to wheelchair users (NRCD, 2003).
4) Changed the tactile paving design (Fig. 17) on the circular path of the open hallway to 90°
5) Removes textured surfaces and obstacles around the tactile paving.

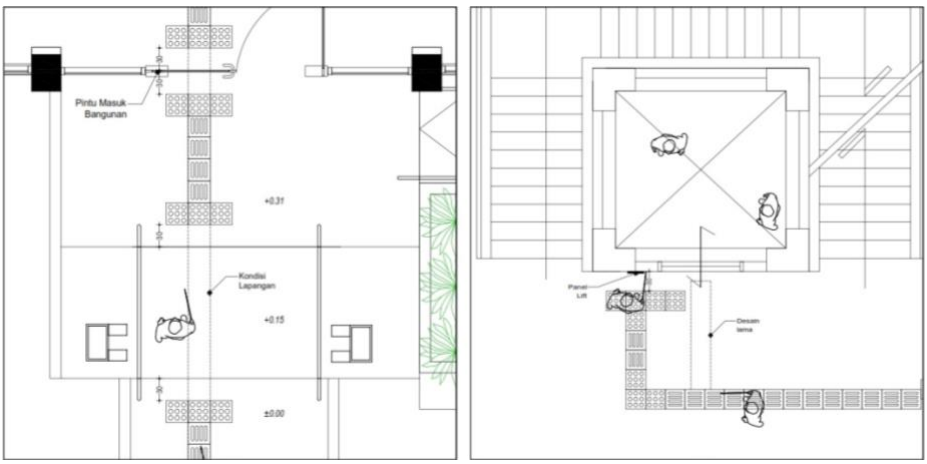


(a) (b)

Figure 32: (a) Recommended tactile paving design at the entrances and (b) elevators

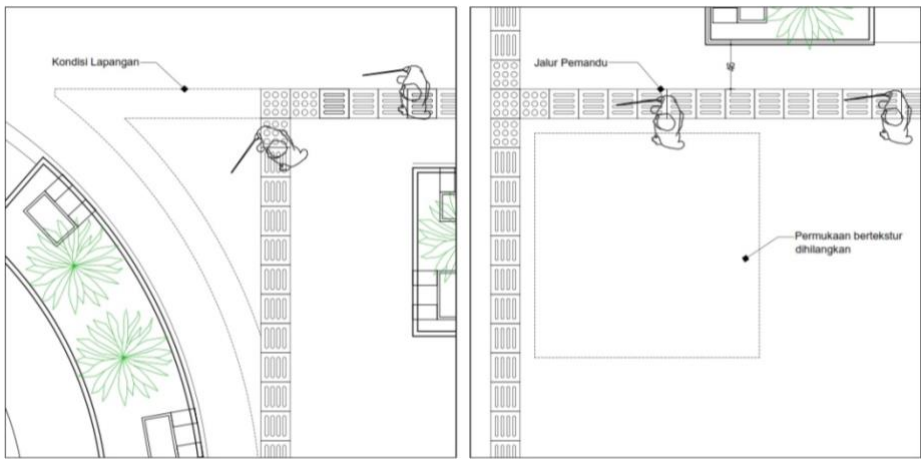


(a) (b)

Figure 33: (a) Recommended tactile paving design at the circular path and (b) Open Hallway

## References

Ardinata, M. (2020). Tanggung Jawab Negara Terhadap Jaminan Kesehatan Dalam Perspektif Hak Asasi Manusia. *Jurnal HAM*, *11*(2), 319–332.

Campus Master Plan at Gowa Final Report. Hasanuddin University Engineering Faculty Development Project. 2008 (https://eng.unhas.ac.id/fakultas/master-plan)

Centre for Excellencein Universal Design. (n.d). Building for Everyone: A Universal Design Approach 2 - Entrances and Horizontal Circulation. Centre for Excellencein Universal Design, National Disability Authority Ireland. https://universaldesign.ie/Built-Environment/Building-for-Everyone/2-Entrances%20and%20Horizontal%20Circulation.pdf

Centre for Excellencein Universal Design. (n.d). Building for Everyone: A Universal Design Approach 3 – Vertical Circulation. Centre for Excellencein Universal Design, National Disability Authority Ireland. https://universaldesign.ie/Built-Environment/Building-for-Everyone/3-Vertical-Circulation.pdf

Hamdi, A. S., & Bahruddin, E. (2015). *Metode penelitian kuantitatif aplikasi dalam pendidikan*. Deepublish.

Kadarudin, S. H., & MH, C. (2021). *Penelitian Di Bidang Ilmu Hukum (Sebuah Pemahaman Awal)*. Formaci.

Kurniawan, H. (2014). Implementasi Aksesibilitas Pada Gedung Baru Perpustakaan UGM. *IJDS: Indonesian Journal Of Disability Studies*, *1*(1).

Levarinda, K. K. (2021). *Kriteria Perancangan Fasilitas Pendukung Taman Samarendah Bagi Penyandang Disabilitas dengan Konsep Universal Design* [PhD Thesis]. Institut Teknologi Kalimantan.

Limantoro, C. (2014). Studi Penerapan Desain Universal Pada Restoran Boncafe di Surabaya. *Dimensi Interior*, *12*(1), 38–50.

Peraturan Menteri Pekerjaan Umum Dan Perumahan Rakyat Republik Indonesia Nomor 14/PRT/M/2017 tentang Persyaratan Kemudahan Bangunan Gedung. 2017. JDIH Kementerian PUPR

Peraturan Daerah Provinsi Sulawesi Selatan Nomor 5 Tahun 2016 tentang Pelindungan dan Pelayanan Bagi Penyandang Disabilitas.

Risdianto, D. (2017). Perlindungan Terhadap Kelompok Minoritas Di Indonesia Dalam Mewujudkan Keadilan Dan Persamaan Di Hadapan Hukum. *Jurnal Rechts Vinding: Media Pembinaan Hukum Nasional*, *6*(1), 125–142.

Rukajat, A. (2018). *Pendekatan penelitian kualitatif (Qualitative research approach)*. Deepublish.

Scott, S. S., McGuire, J. M., & Foley, T. E. (2003). Universal design for instruction: A framework for anticipating and responding to disability and other diverse learning needs in the college classroom. *Equity &Excellence in Education*, *36*(1), 40–49.

Soleh, A. (2016). *Aksesibilitas Penyandang Disabilitas terhadap Perguruan Tinggi; Studi Kasus di Empat Perguruan Tinggi Negeri di Yogyakarta*. LKIS Pelangi Aksara.

Sugiyono. 2020. Metode Penelitian Kuantitatif, Kualitatif, dan R&D. Penerbit Alfabeta, Bamdumg, Indonesia.

Syaifuddin, A. F. (2006). Membumikan Multikulturalisme di Indonesia. *Jurnal Antropologi Sosial Budaya ETNOVISI*, *2*(1), 3–10.

Tactile Ground Surface Indicators for Blind Persons (PDF). National Rehabilitation Center for Persons with Disabilities Japan. December, 2003. (http://www.rehab.go.jp/english/whoclbc/pdf/E13.pdf)

Trimaya, Arrista. 2016. Upaya Mewujudkan Penghormatan, Perlindungan, Dan Pemenuhan Hak Penyandang Disabilitas Melalui Undang-Undang Nomor 8 Tahun 2016 Tentang Penyandang Disabilitas. Jurnal Legislasi Indonesia. Vol 13, No. 04, Desember 2016: 401-410

Wibawa, B. A., & Widiastuti, K. (2020). *Standar Dan Implementasi Desain Universal Pada Bangunan Gedung Dan Lingkungan*. Deepublish.